WHERE USED
SNOW PLOW
S-8 TO S-12

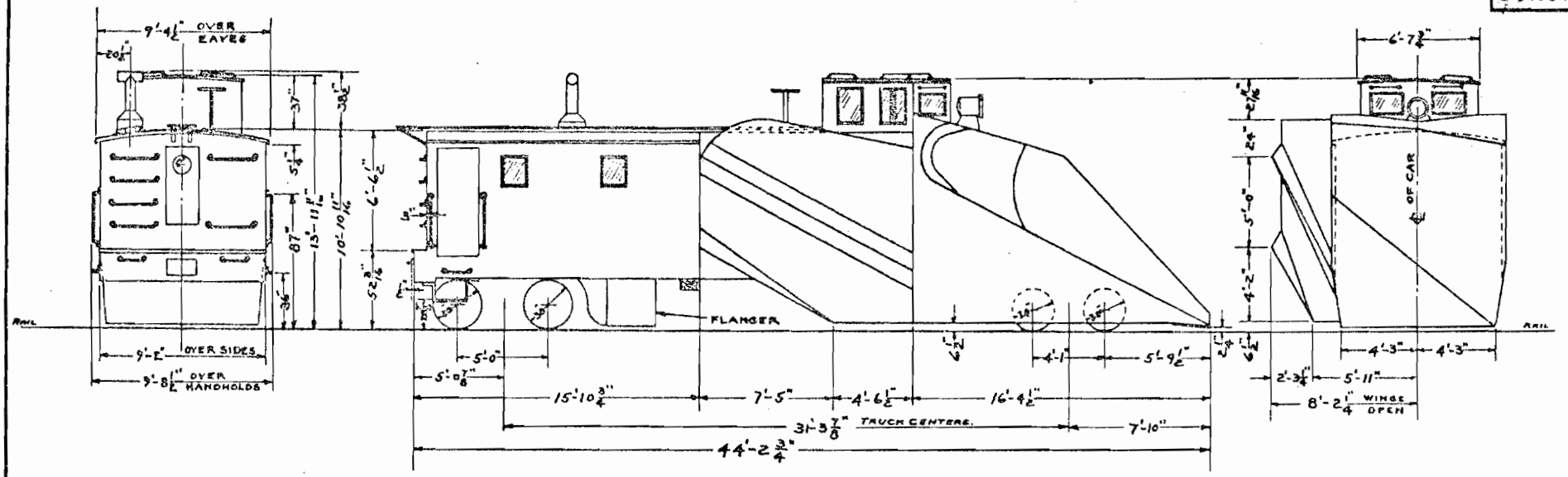

DESCRIPTIVE DATA

SNOW PLOW - DOUBLE TRACK OPERATION.
BUILT BY - RUSSELL CAR CO. RIDGEWAY PA. 1925.
AIR BRAKE - W.A.B. CO'S.
HAND BRAKE - PLAIN A.A.R. STAFF - 16" WHEEL INSIDE, 16" WHEEL ON ROOF.
TRUCKS - 4 WHEEL ARCH BAR, 30" WHEELS.
JOURNALS - 4¼" X 8". (PLOW END TRUCK HAS INSIDE & OUTSIDE JOURNALS)
COUPLER - SPECIAL BUTT CAB END, REMOVABLE DRAW BAR PLOW END. NO DRAFT GEARS.
SNOW FLANGER UNDER CAR BODY. (AIR OPERATED)
SNOW DEFLECTOR WINGS ON BOTH SIDES OF CAR - MOVABLE (AIR OPERATED)
LIGHT WEIGHT _ _ _ _ 77,500 LBS.
CAR EQUIPPED WITH ELECTRIC LIGHTS - JUMPER CABLE AT PLATFORM.
ROOF - WOOD - CANVAS COVERED.
ICE CUTTER INSIDE RAILS FOR WHEEL FLANGE CLEARANCE (AIR OPERATED)

IN	CK	BY	WHY REISSUED	DATE	LETTER

N. Y., N. H. & H. R. R

NEW HAVEN NOV. 30, 1947

DIAGRAM
SNOW PLOW - DOUBLE TRACK OPERATION.
S-8 TO S-12

CORRECT G. L. Goebel ASST. M.E.

25229

APPROVED B. Jones C. M. E.

DR	TR	CK	IN
G.A.K.	R.K.C.	B	[illegible]

Eugene Dietzgen Co., Inc. New York, N.Y.